ESPERANCE

2642-AGB

Playing with shape and scale, Esperance is a breath of fresh air. Serving as both an uplight and downlight, the cone-shaped linen shades form an hourglass shape. Reminiscent of a ceiling fan, the two large suspended discs strung with natural bleached abaca evoke a sense of movement. As a chandelier or pendant light, the sculptural silhouette and white materiality create a clean and fresh vision overhead.

*Due to the one-of-a-kind nature of the medium, exact colors and patterns may vary slightly from the image shown.

FINISHES

AGED BRASS

DIMENSIONS

Height: 66"
Width/Diameter: 66"
Length: 66"
Minimum Height: 66"
Maximum Height: 66"
Canopy/Backplate: 7.75"
Hanging Type: 108" Premium Composite Cord
Product Weight: 66lb
Extension: 66"
Top to Center: 66"
Canopy/Backplate Shape: Round
Sloped Ceiling Compatible: No
Living Finish: Yes
Uplight Only: Yes

Shade

Shade 1: Linen
Shade 1 Finish: White
Shade 1 Top Width: 16"
Shade 1 Height: 10"
Shade 2: String
Shade 2 Finish: White
Shade 2 Top Width: 42.25"
Shade 2 Height: 4"

ELECTRICAL

Bulb 1
Bulb Included: No
Socket: E26 Medium Base
Bulb Type: A19
Max Wattage: 15
Bulb Quantity: 2
Wire Length: 500mm
Cord Type: ! New Cord Type
Dimmer Type: Incandescent
Switch Type: ON/OFF STOMP SWITCH
Gem Box Required (2"x3"): Yes
Dark Sky: Yes
CRI: 66
Color Temp.: 66k
Lumens: 66
Title 24: Yes
Field Serviceable: No

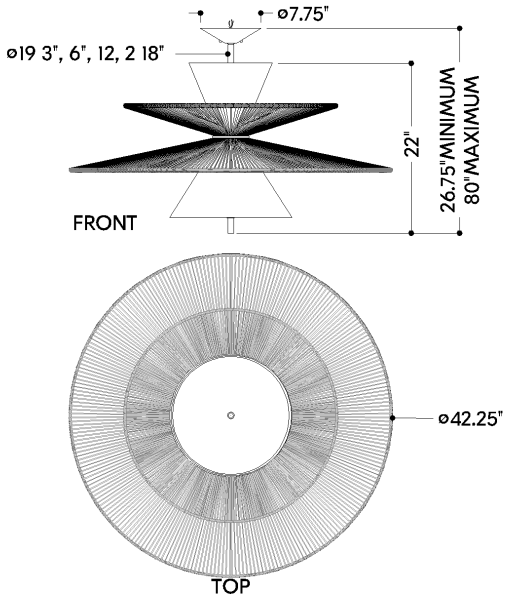

ESPERANCE

2642-AGB

Battery

Battery Powered: Yes
Battery Included: Yes
Battery Life: ! New Battery Life !

SHIPPING

Carton 1: 1" x 1" x 1"
Carton 1 Weight: 1lb
Shipping Method: Ground
Country of Origin: CN