RIO

375-20-VPB

With hand-blown Piastra glass, this statement pendant reimagines a traditional lantern as an aquatic vision. Resembling water, the rippled glass silhouette diffuses and reflects the light coming from within. Vintage Brass pins and chains suspend the fixture, bringing a sense of the old world to the contemporary materiality. Available in three sizes as a lantern or as a flush mount.

*Due to the one-of-a-kind nature of the medium, exact colors and patterns may vary slightly from the image shown.

FINISHES

VINTAGE POLISHED BRASS
Coastal Suitable Finish (EPM): No

DIMENSIONS

Height: 28.25"
Width/Diameter: 20.25"
Minimum Height: 32"
Maximum Height: 101.5"
Canopy/Backplate: 6.5"
Product Weight: 15.84lb
Canopy/Backplate Shape: Round
Sloped Ceiling Compatible: No
Living Finish: No
Uplight Only: No

Shade

Shade 1: Piastre Glass
Shade 1 Finish: Clear
Shade 1 Top Width: 4.5"
Shade 1 Height: 24.5"

ELECTRICAL

Bulb 1
Bulb Included: No
Socket: E12 Candelabra Base
Bulb Type: B11
Max Wattage: 8
Bulb Quantity: 8
Gem Box Required (2"x3"): No
Dark Sky: No

SHIPPING
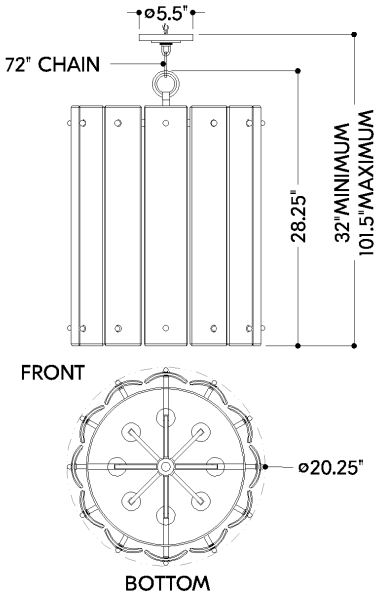
Carton 1: 31" x 26" x 26"
Carton 1 Weight: 24lb
Shipping Method: Ground
Country of Origin: CN