MAPLE

B3414-PBR

Maple exudes elegance with its cool curves and vintage-inspired shades. The shape of the seeded opal glass shades feels organically inspired, while small knob details on the Patina Brass metalwork strike an industrial note. Whether you choose a 1-light sconce or a 5 or 6-light chandelier, there are plenty of ways to make a statement with Maple.

FINISHES

PATINA BRASS
Coastal Suitable Finish (EPM): No

DIMENSIONS

Height: 13.5"
Width/Diameter: 4.75"
Canopy/Backplate: 4.75"
Product Weight: 2.65lb
Extension: 7.5"
Top to Center: 6"
Canopy/Backplate Shape: Round
Sloped Ceiling Compatible: No
Living Finish: No
Uplight Only: No

Shade

Shade 1: Glass
Shade 1 Finish: Seeded Opal
Shade 1 Top Width: 2.5"
Shade 1 Bottom L/W: 0" / 4.75"
Shade 1 Height: 10.25"

ELECTRICAL

Bulb 1
Bulb Included: No
Socket: E12 Candelabra Base
Bulb Type: B11
Max Wattage: 8
Bulb Quantity: 1
Cord Type: B & W TEFLON W/ GROUND WIRE
Gem Box Required (2"x3"): No
Dark Sky: No

SHIPPING
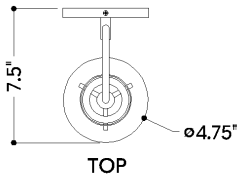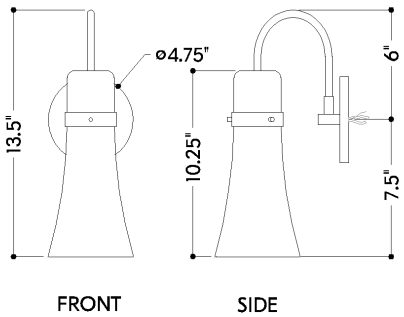
Carton 1: 14" x 9" x 13"
Carton 1 Weight: 5lb
Shipping Method: Ground
Country of Origin: CN