LIBA

H884701L-AGB/SPG

A visual treat, Liba features classic forms updated with eye-catching details. Known for her color sensibility, Zoe Feldman has added a playful touch to this fixture with its unique hue. The warm neutral has a hint of pink that creates a calming, inviting presence which is complemented by the Aged Brass framework. The slender scalloped edges of the fixture allow light to shine through while adding a whimsical note. Available as a 1 or 2-light sconce and a pendant in two sizes, Liba is a thing of beauty. Part of our Zoe Feldman collection.

FINISHES

AGED BRASS w/ SOFT PEIGNOIR

DIMENSIONS

Height: 10.5"
Width/Diameter: 15"
Minimum Height: 15.5"
Maximum Height: 51"
Canopy/Backplate: 6"
Hanging Type: 1-3" / 1-6" / 1-12" / 1-18" Stems
Product Weight: 14.57lb
Canopy/Backplate Shape: Round
Sloped Ceiling Compatible: No
Living Finish: No
Uplight Only: No

Shade

Shade 1: Glass
Shade 1 Finish: Opal Shiny
Shade 1 Top Width: 10.25"
Shade 1 Height: 6.25"
Shade 2: Metal
Shade 2 Finish: Soft Peignor
Shade 2 Top Width: 11.75"
Shade 2 Height: 15"

ELECTRICAL

Bulb 1
Bulb Included: No
Socket: E26 Medium Base
Bulb Type: A19
Max Wattage: 15
Bulb Quantity: 1
Gem Box Required (2"x3"): No
Dark Sky: No

SHIPPING
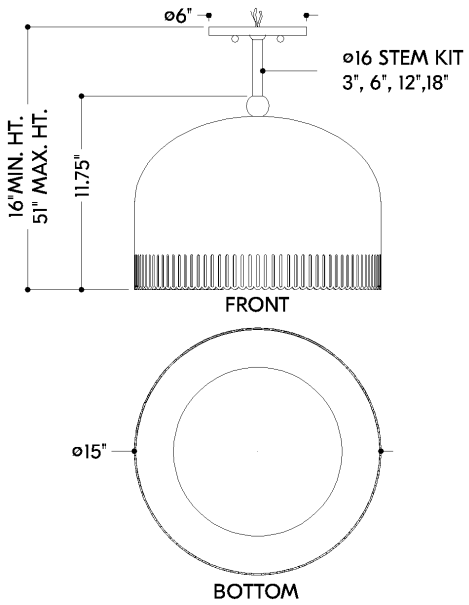
Carton 1: 18" x 12" x 10"
Carton 1 Weight: 19lb
Shipping Method: Ground
Country of Origin: CN